ϕ 109.5mm ,80-140 Ncm , 350W
Weight : 3.8 Kg/pcs

M1080

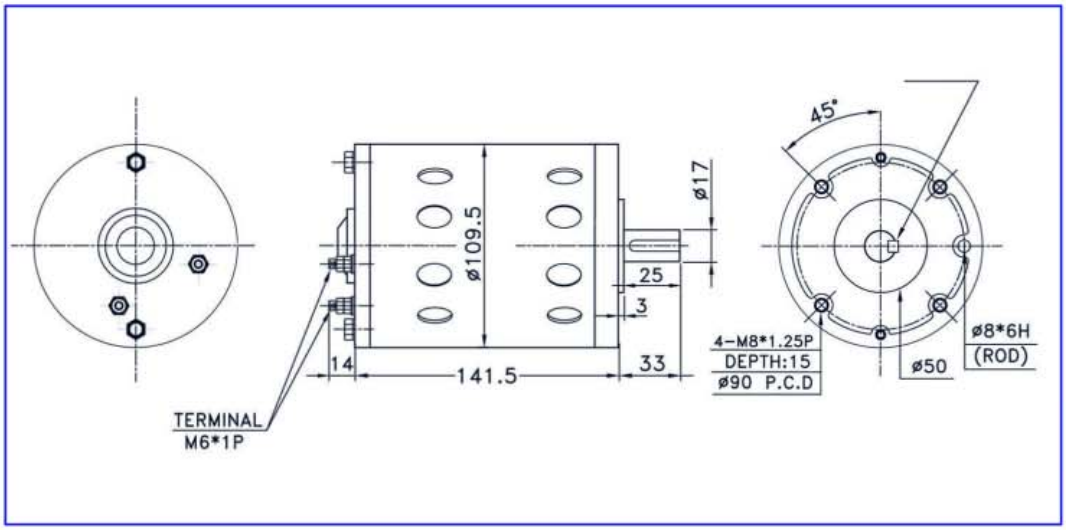

24VDC No Load 3500rpm Torque/Speed Performance Curve

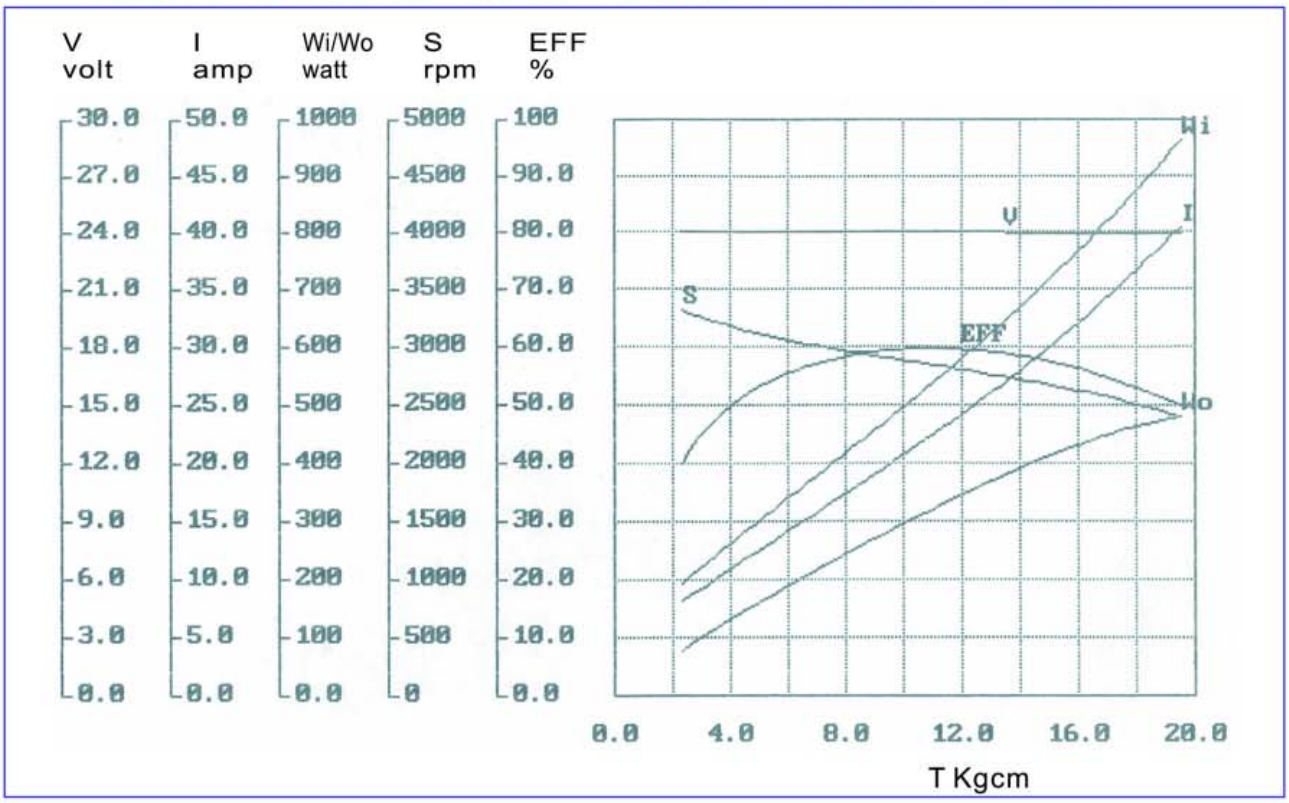

NO	R.P.M.	VOLT(V)	I(AMP)	INPUT(W)	TORQUE(KG-CM)	OUTPUT(W)	EFF(%)
1	3307	24.03	8.01	192.5	2.30	78.0	40.5
2	3180	24.03	11.08	266.3	4.10	133.8	50.2
3	3068	24.02	13.85	332.7	5.80	182.6	54.9
4	2967	24.00	16.93	406.3	7.60	231.4	57.0
5	2903	24.00	19.65	471.6	9.30	277.0	58.7
6	2840	24.00	22.49	539.8	11.10	323.4	59.9
7	2778	23.95	25.24	604.5	12.80	364.8	60.3
8	2713	23.95	28.11	673.2	14.50	403.6	60.0
9	2588	23.91	32.54	778.0	16.30	432.8	55.6
10	2606	23.89	34.02	812.7	16.30	435.8	53.6
11	2384	23.85	40.90	975.5	19.80	484.3	49.6